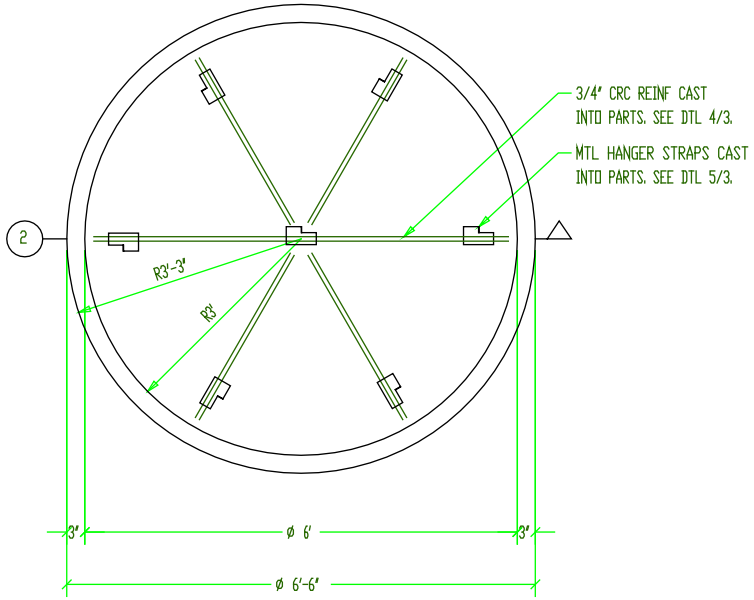

1 DOME REFLECTED VIEW

3/4" = 1' - 0"

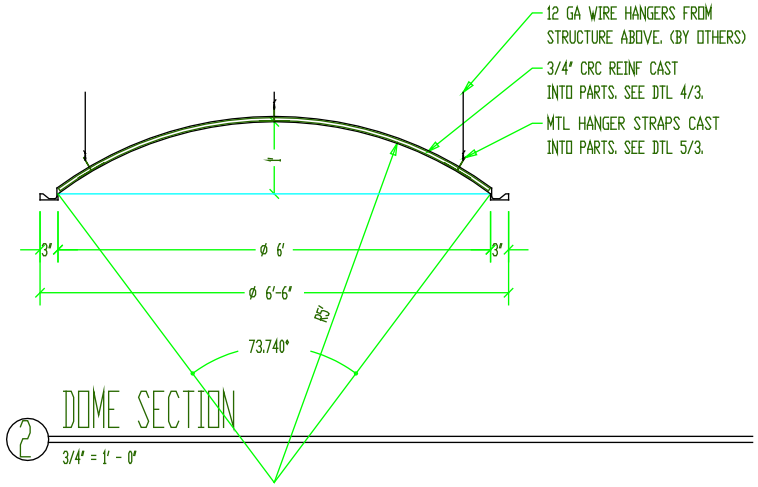

2 DOME SECTION

3/4" = 1' - 0"

NOT TO SCALE

Architectural Fabrications
WEATHR ROK GRC
by Plastrglas, Inc.
Setting the Standard

PLASTRGLAS
Architectural Fabrications

4200 N 30th St. Omaha, NE 68111 phone: 1-800-844-0652 fax: 1-402-451-5375 www.plastrglas.com

Mold Number

W19922A