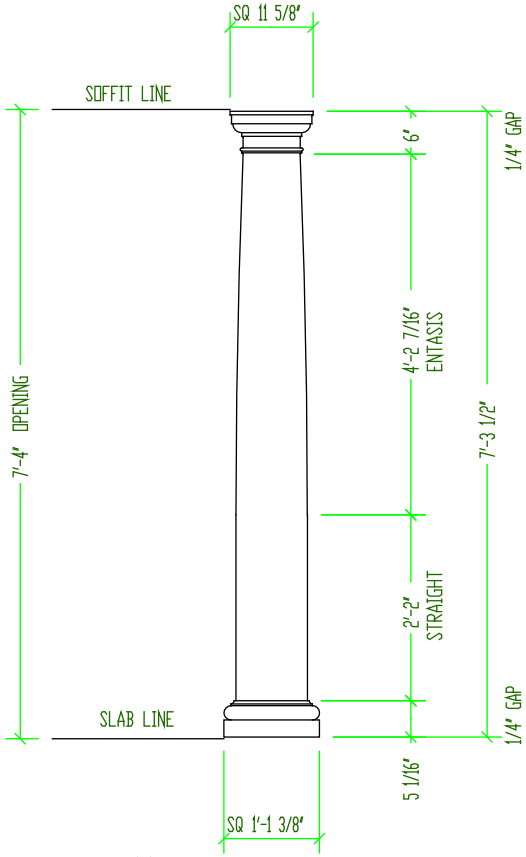

COLUMN COVER ELEVATION

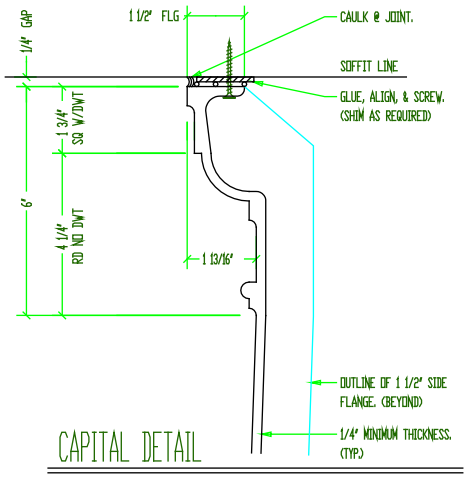

CAPITAL DETAIL

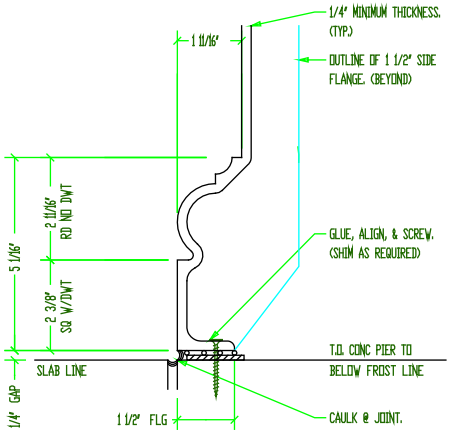

BASE DETAIL

NOT TO SCALE

Architectural Fabrications WEATHR ROK GRC by Plastrglas, Inc. Setting the Standard

PLASTRGLAS Architectural Fabrications

4200 N 30th St. Omaha, NE 68111 phone: 1-800-844-0652 fax: 1-402-451-5375 www.plastrglas.com

Mold Number

W12027A